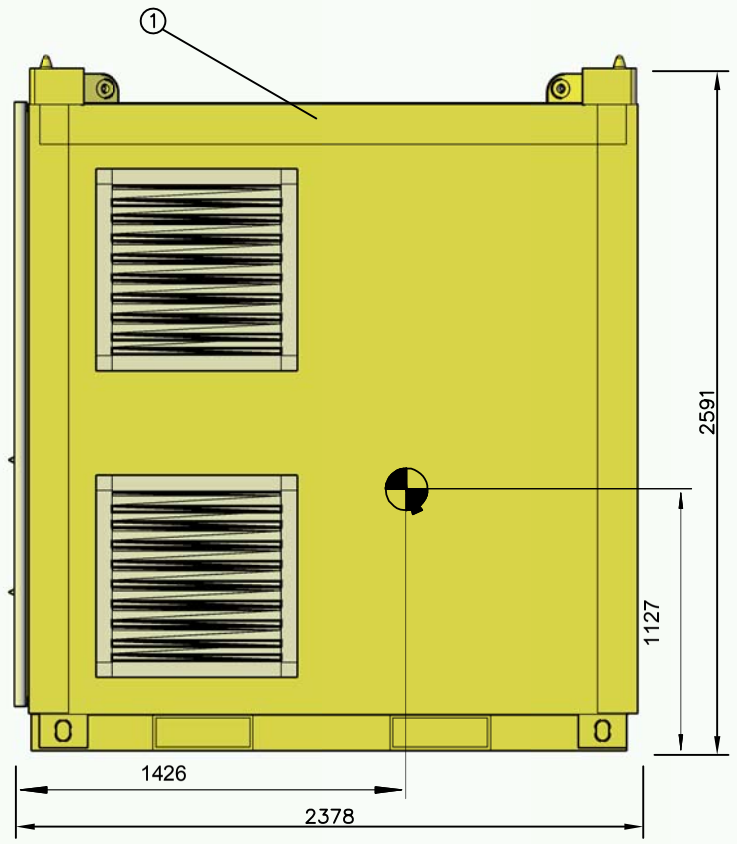

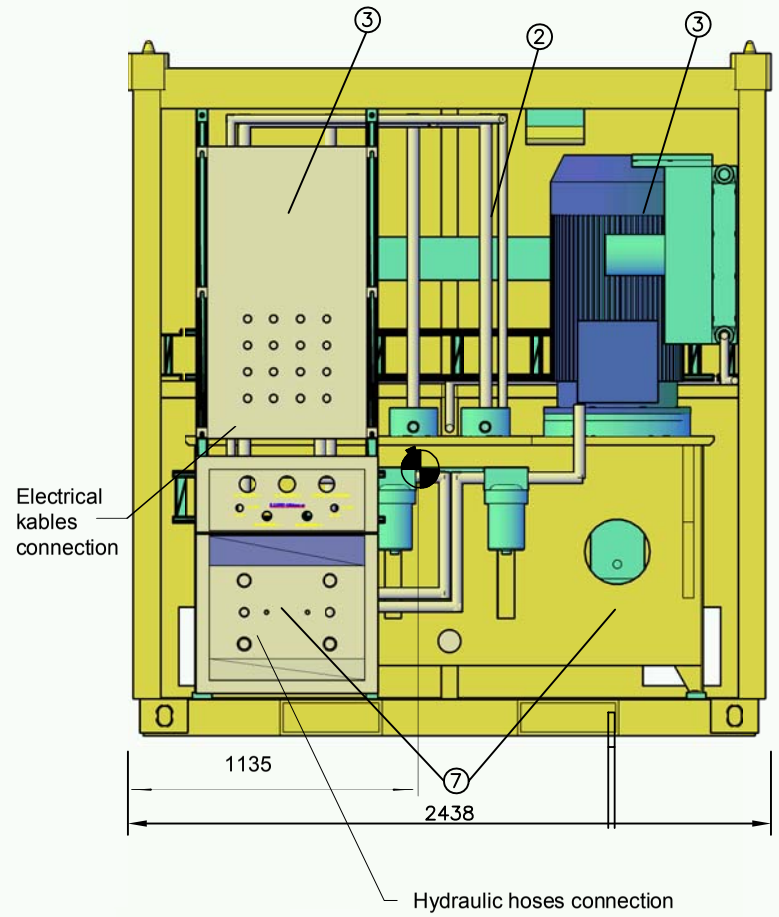

POS.	DESRIPTION		
01	CONTAINER 8FT	–	–
02	COOLER	–	–
03	MOTOR	–	–
04	CONTROLL PANEL	–	–
05	BULKHEAD	–	–
06	OILTANK 1900L	–	–
07	OIL PUMP	–	–

Weight with oil: 6500 kg.
Weigth without oil: 5000 kg.
*COG with oil.

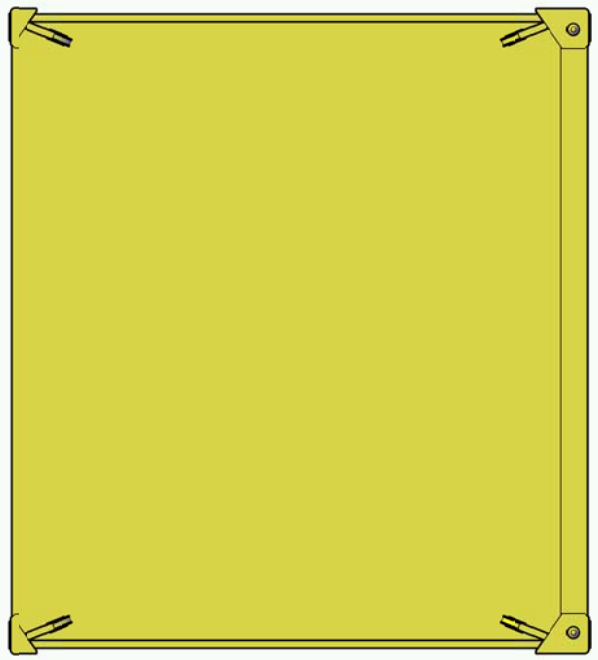

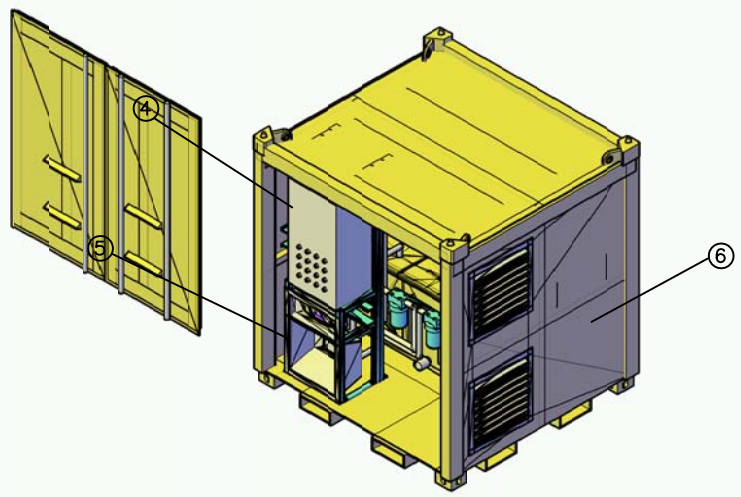

REV.	DATE	REASON FOR ISSUE	PREPARED	CHECKED	APPROVED
02	12.03.09	FOR INFO	KJ	ØH	EMR
01	03.03.09	FOR INFO	KJ	ØH	EMR

K.LUND Offshore as

P.O. NUMBER	PACAGE TITLE
–	–

TAG.NO(S): –

SUPPL. DOC. NUMBER: –

DRAWING TITLE: GA HPU 2527759

PROJECT NAME: 2527759 2x75kW EX HPU

DRAWING NO.	Scale	Size	Sheet No.	Rev
2527759–01	0.7:10	A1	1 OF 1	01